A-A
1:2

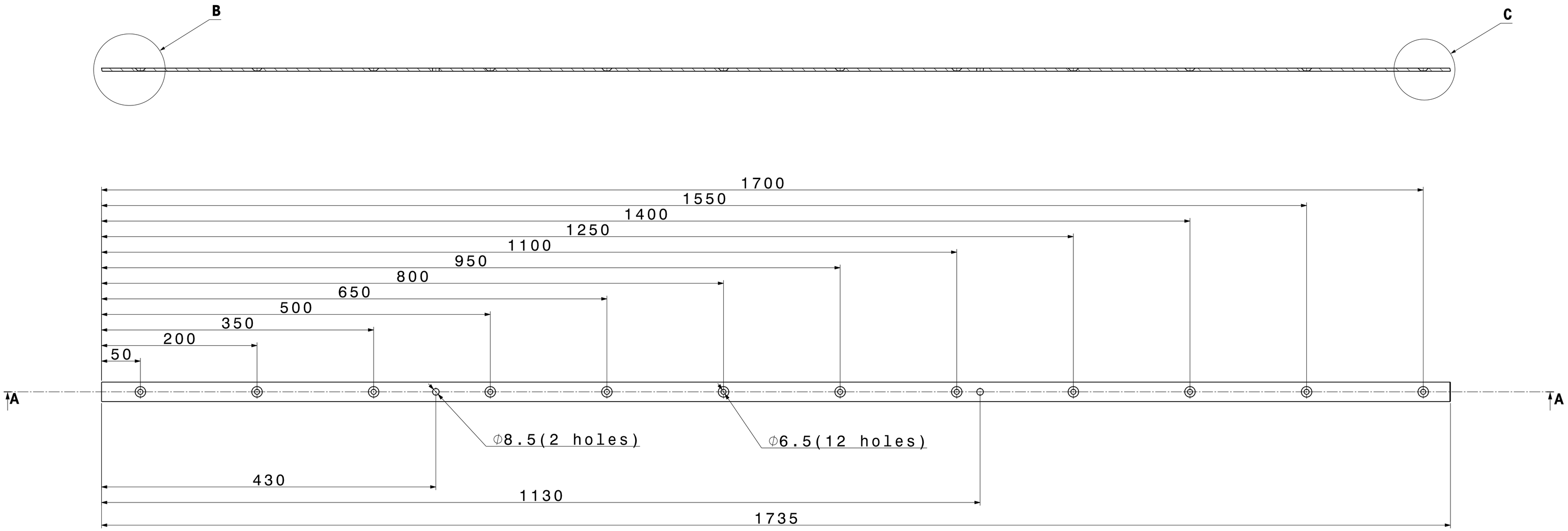

B
2:1

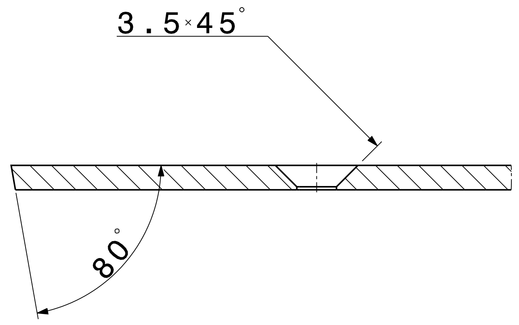

C
2:1

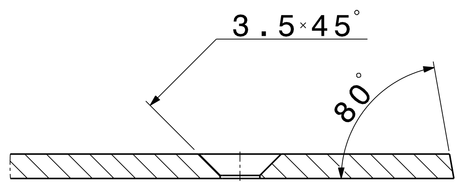

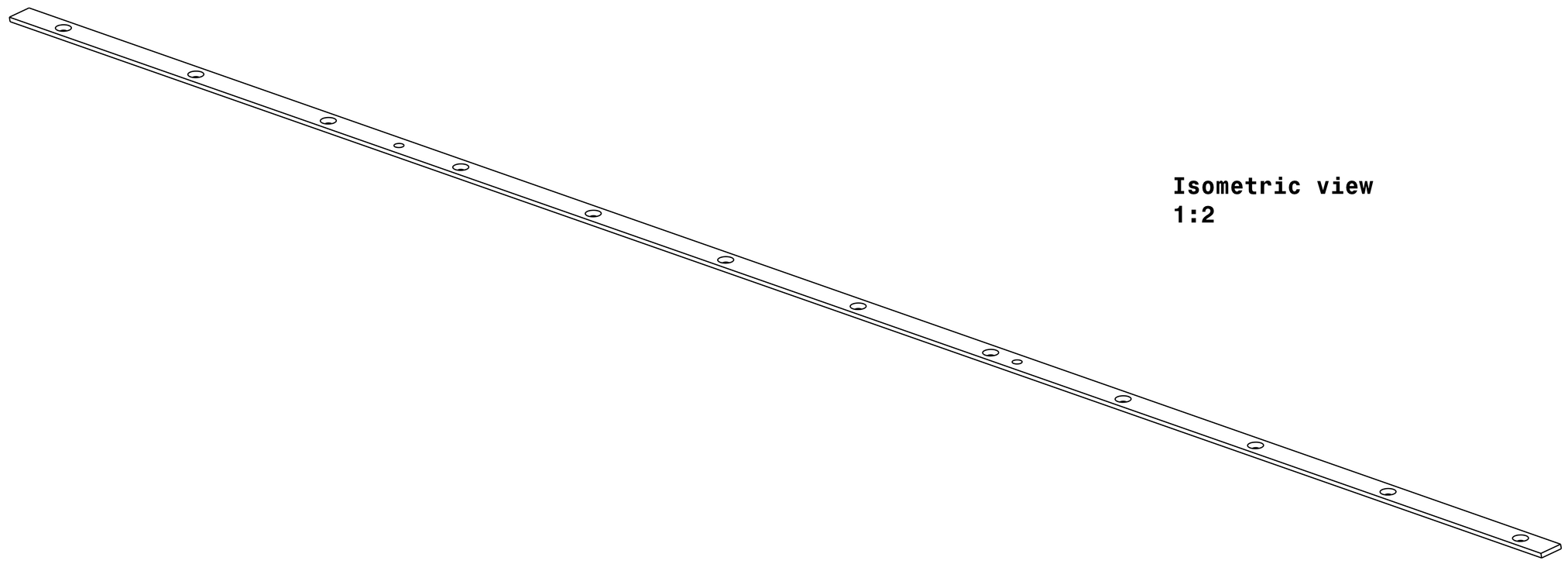

Isometric view
1:2

Mass: 0.459 kg

1. * Demensions are for references only.
2. H12, h 12, IT12/12

QUA	DESCRIPTION	POS	MAT.	OBSERVATIONS	REF.CERN
1		1			

ENS/ASS — S.ENS/S.ASS

ISO 2768-mK — Ra 3.2 — ISO 13715 ±0.5 ±0.5

SIDE PANEL PART_02

SCALE 1:2

DRAWN: S. MARTIROSYAN 2018-05-23
CONTROLLED
RELEASED
APPROVED
CAD Document Number: ST0990751_02
REPLACES

NON VALABLE POUR EXECUTION
NOT VALID FOR EXECUTION

GAC -

SIZE 0 IND.

DESIGN, MODELING, TOLERANCES ACCORDING TO ISO STANDARDS

PROJECTION

DRAWING, MODELING, TOLERANCES ACCORDING TO ISO STANDARDS

DRAWING MATERIAL OWNERSHIP: CERN
ATOMIC AND MOLECULAR PHYSICS
ATOMIC, MOLECULAR AND NUCLEAR RESEARCH
CERN, CH

© CERN, 2018
THIS DRAWING IS THE PROPERTY OF CERN. IT MUST NOT BE REPRODUCED OR MADE AVAILABLE TO THIRD PARTIES WITHOUT WRITTEN AUTHORISATION.
CE DESSIN EST LA PROPRIETE DU CERN. IL NE DOIT PAS ETRE REPRODUIT OU MIS EN LIGNE SANS AUTORISATION ECRITE.