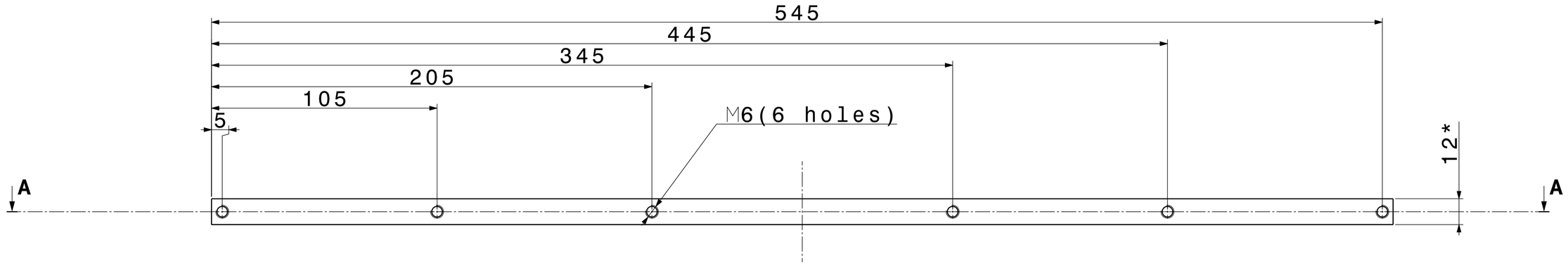

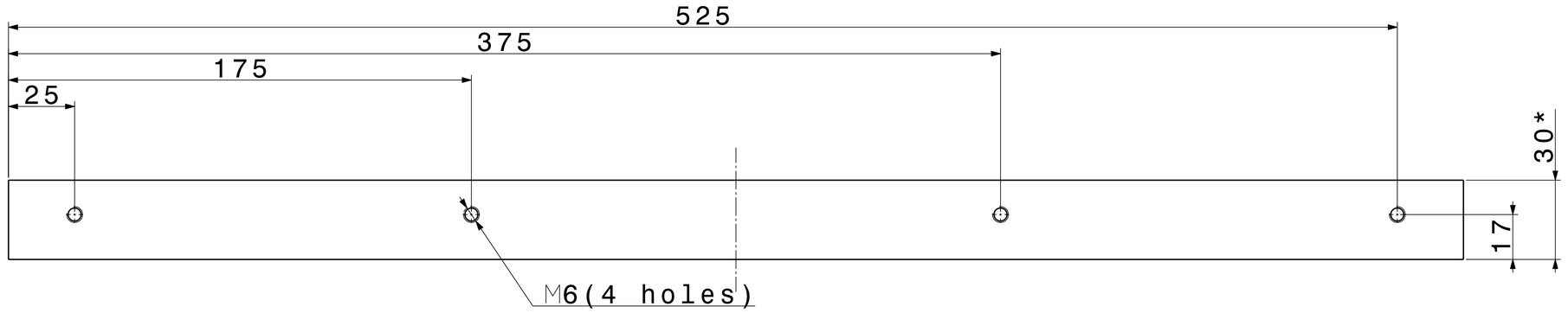

A-A
1:1

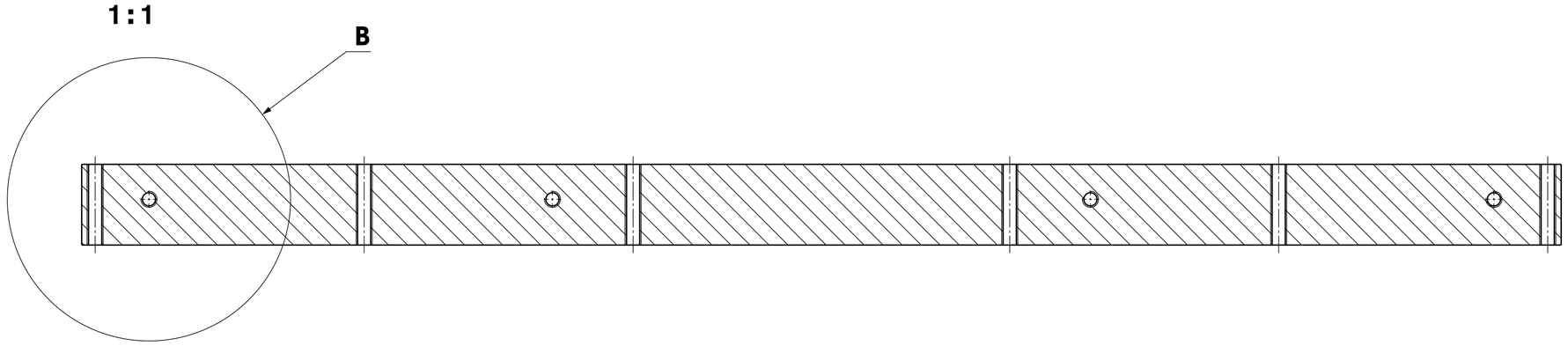

Isometric view
1:1

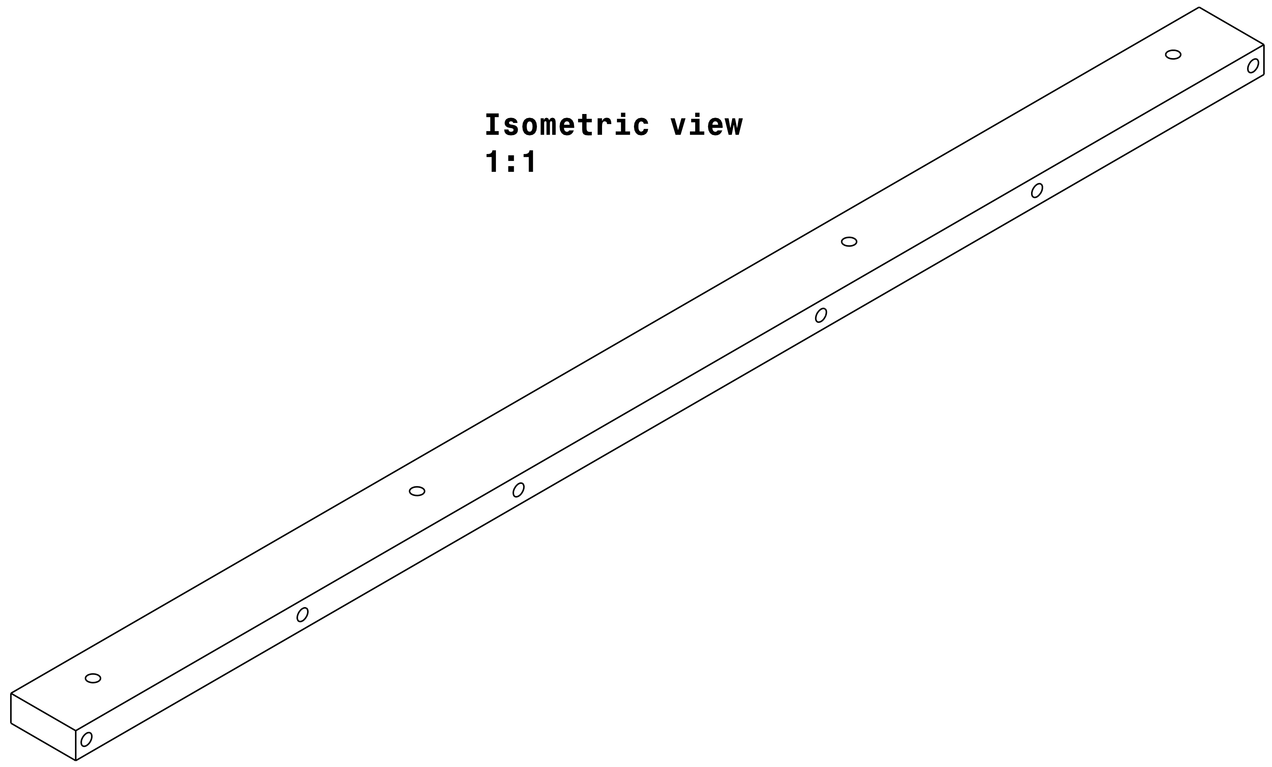

B
2:1

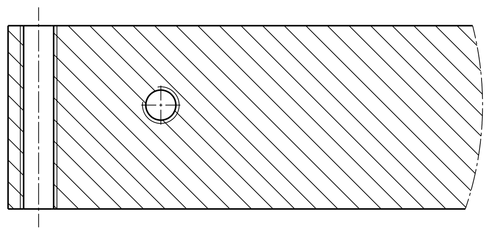

Mass: 0.004 kg

1. * Demensions are for references only.
2. H12, h 12, IT12/12

1	FLAT BARS	1	ANTICORODAL	CERN Stores Catalogue	44.02.02
					066.4
QUA	DESCRIPTION	POS	MAT.	OBSERVATIONS	REF.CERN
ENS/ASS			S.ENS/S.ASS		

ISO 2768-mK | Ra 3.2 | ISO 13715 -0.5 +0.5

DRAWN: S. MARTIROSYAN 2018-05-22
CONTROLLED
RELEASED
APPROVED
CAD Document Number ST0990744_02
REPLACES

Bottom fixing bar_01

SCALE 1:1

NON VALABLE POUR EXECUTION
NOT VALID FOR EXECUTION

GAC -

SIZE 0 IND.

DESSIN: DIMENSIONS, TOLERANCES ACCORDANT ISO 128, ISO 129
DRAWING: DIMENSIONS, TOLERANCES ACCORDING TO ISO STANDARDS

PROJECTION

ORGANISATION EUROPEENNE POUR LA RECHERCHE NUCLEAIRE
EUROPEAN ORGANIZATION FOR NUCLEAR RESEARCH

CE DOCUMENT EST LA PROPRIETE DU CERN. IL NE PEUT ETRE REPRODUIT OU COMMUNIQUE DES TIERS SANS AUTORISATION ECRITE
THIS DOCUMENT IS THE PROPERTY OF CERN. IT MAY NOT BE REPRODUCED OR COMMUNICATED WITHOUT WRITTEN PERMISSION