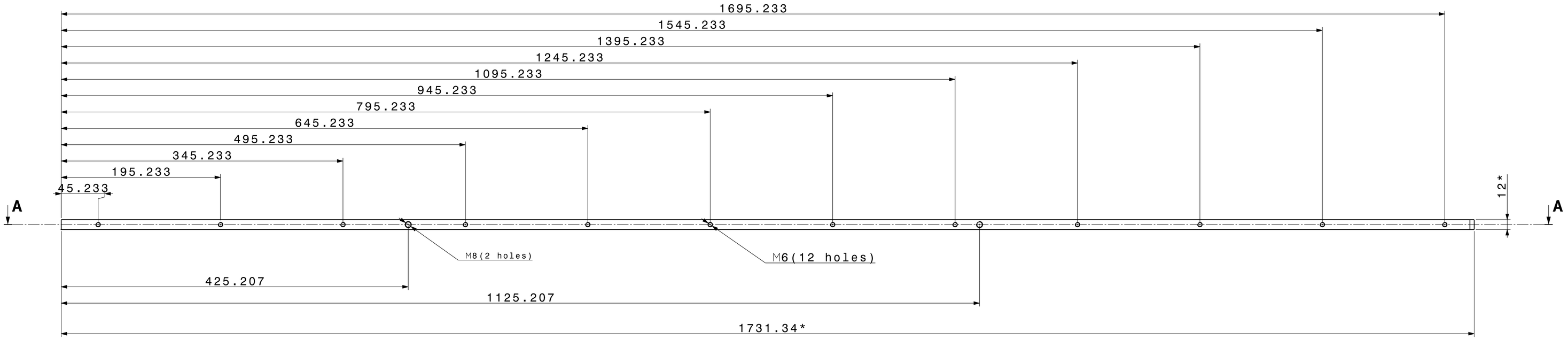

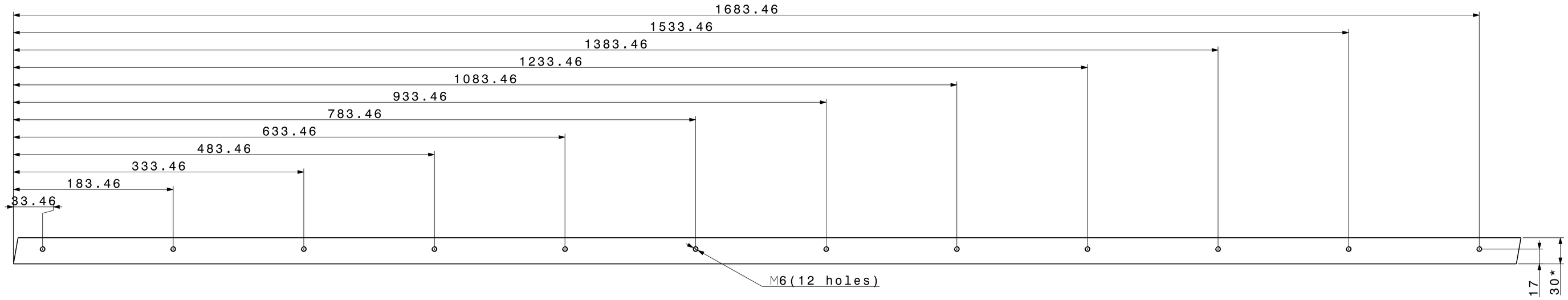

A-A
1:2

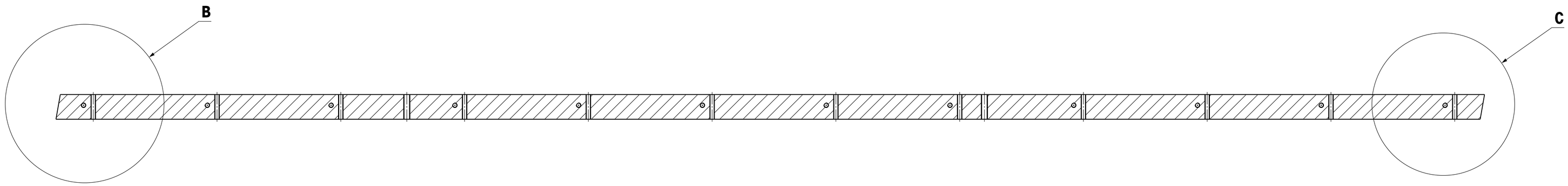

B
1:1

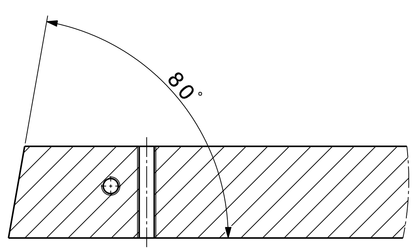

C
1:1

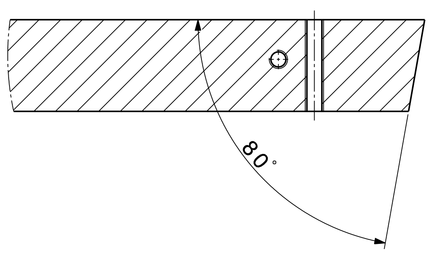

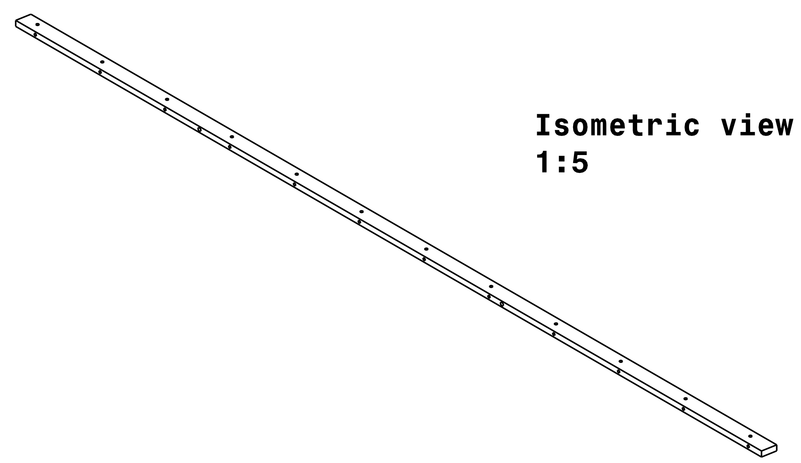

Isometric view
1:5

Mass: 0.004 kg

1. * Demensions are for references only.
2. H12, h 12, IT12/12

QUA	DESCRIPTION	POS	MAT.	OBSERVATIONS	REF.CERN
1		1			

ENS/ASS — S.ENS/S.ASS

ISO 2768-mK — Ra 3.2 — ISO 13715 -0.5 +0.5

DRAWN	S. MARTIROSYAN	2018-05-22
CONTROLLED		
RELEASED		
APPROVED		
CAD Document Number	ST0990733_03	
REPLACES		

BEAM FIXING LEFT_01

SCALE 1:2

NON VALABLE POUR EXECUTION
NOT VALID FOR EXECUTION

GAC -

SIZE 0 IND.

DESSIN: DIMENSIONS, TOLERANCES ET PROPRIETES ACCORDANT A LA NORME
DRAWING: DIMENSIONS, TOLERANCES AND PROPERTIES ACCORDING TO ISO STANDARDS

PROJECTION

ORGANISATION EUROPEENNE POUR LA RECHERCHE NUCLEAIRE
EUROPEAN ORGANIZATION FOR NUCLEAR RESEARCH

CE DESSIN NE DOIT ETRE ETABLI QUE PAR PERSONNES DIRECTEMENT MISES AUTORISEES PAR LA DIRECTION DU CERN
THIS DRAWING MUST BE ESTABLISHED BY PERSONS DIRECTLY AUTHORISED BY CERN MANAGEMENT